Trio GENERATOR

OUTPUT VALUES

Standby Power	Voltage	230/400
Standby Power	kVA	430
Standby Power	kW	344
Standby Power	Amper	620
Prime Power	Voltage	230/400
Prime Power	kVA	387

Prime Power	kW	310
Prime Power	Amper	557

DIESEL ENGINE

Brand	Shanghai
Model	SC13H435e
Max. Total Output Pow. (kWm/hp)	375/509
Cylinder Displacement (lt)	14,1
Cylinder Orientation	6 Single Line
Bore x Stroke(mm*mm)	135*150
Compression Ratio	17;1
Governor Type	Electronic
Rotation	1500 RPM
Aspiration System	Turbo Charge
Injection	Direct
Cooling System	Water Cooled
Electrical System(V DC)	24
Oil Capacity (lt)	34,4
Engine Coolant Capacity (lt)	70
Fuel Cons. %50 (lt/h)	44
Fuel Cons. %75 (lt/h)	61
Fuel Cons. %100 (lt/h)	84

ALTERNATOR

Standby Power (kVa/kw)	440/352
Prime Power (kVa/kw)	396/316
Brand	TRIO
Output Voltage (V)	231/400
Frequency (Hz)	50
Stationary Vol. Regulation(±)	0,01
Short Circuit Current	%300 (10 sec)
Insulation	H
Protection	IP23
E ciency (%)	92
Overloading	110% for 1 hour
Power Factor (cos Q=0.8)	0,8
Tot. Harmonic Dist. Rate	<1 %
Connection Type	Star
Number of Pole	4
Number of Bearing	Single

DIMENSIONS & WEIGHT

Without Canopy	Width	1500 mm
Without Canopy	Length	3500 mm
Without Canopy	High	2200 mm
Without Canopy	Weight	3250 kg
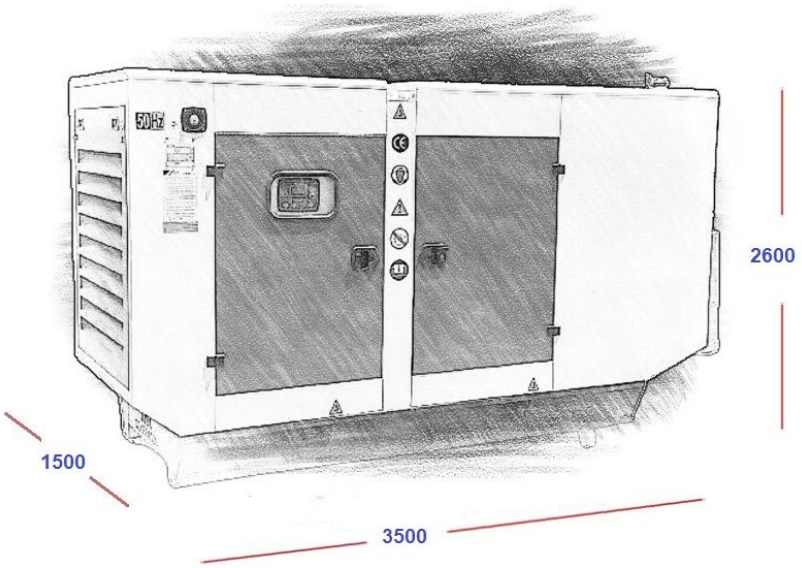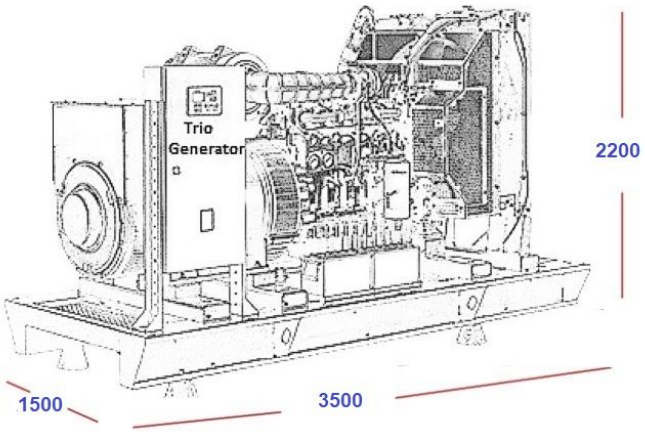
Without Canopy	Fuel Tank Capacity	660 lt
With Canopy	Width	1500 mm
With Canopy	Length	3500 mm
With Canopy	High	2600 mm
With Canopy	Weight	4030 kg
With Canopy	Fuel Tank Capacity	660 lt